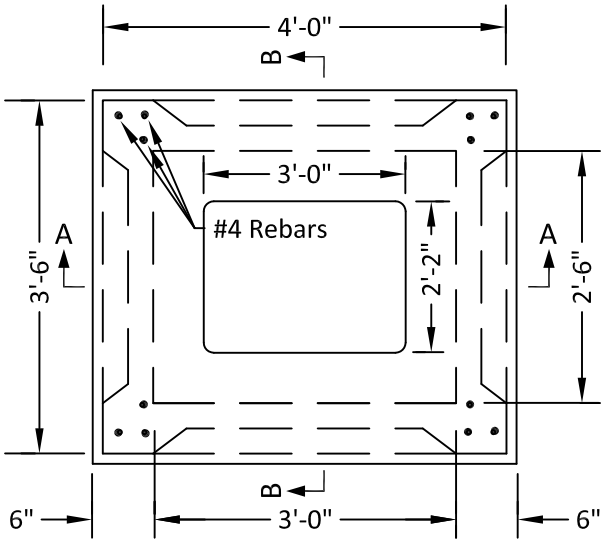

WAFFLE WALL PLAN VIEW

NOTE:
The pattern of the knock-out panels are shown for illustrative purposes only

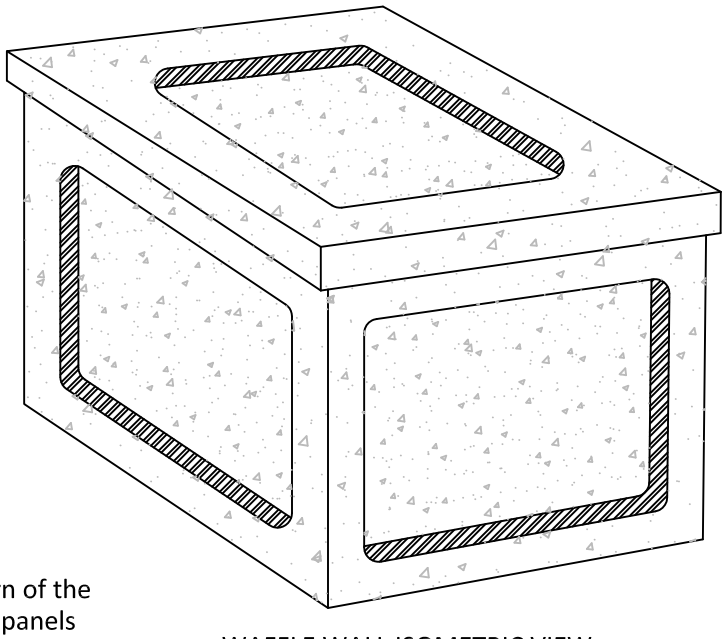

WAFFLE WALL ISOMETRIC VIEW

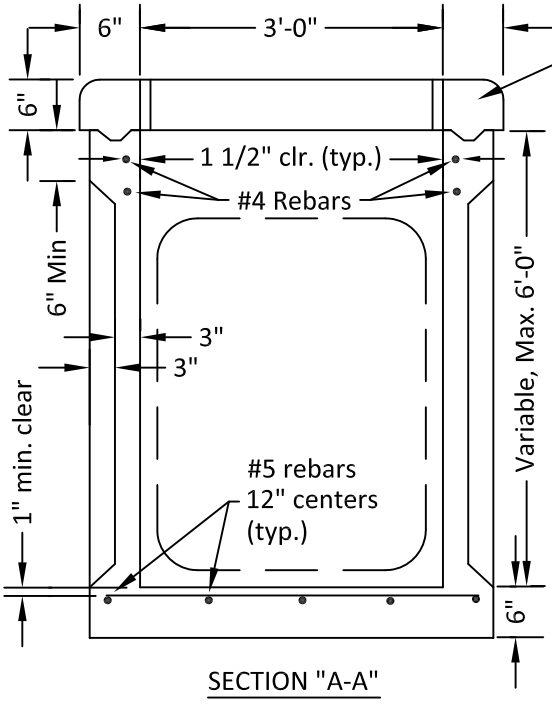

SECTION "A-A"

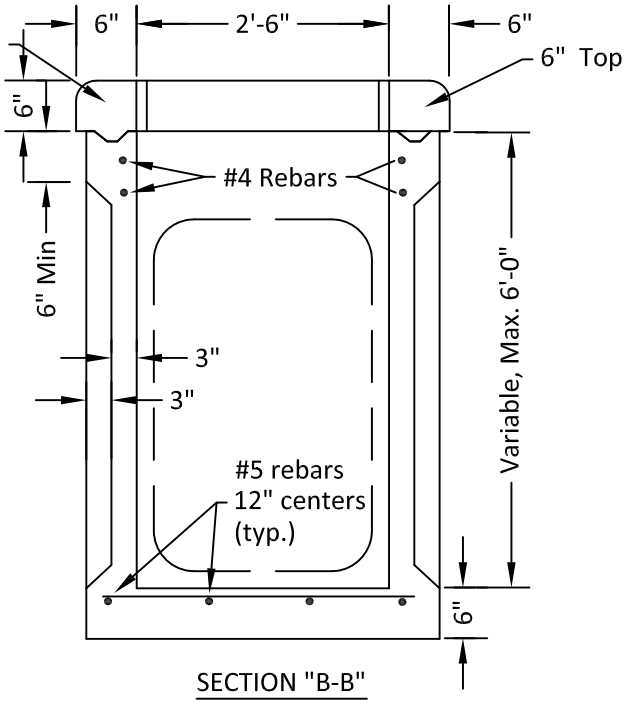

SECTION "B-B"

NOTE: refer to Drawing 606a for additional requirements

Rev	By	Date
1	RTN	06/11/17

Scale: NTS

Precast Waffle
Drainage Structure

City of Palo Alto Standard

Approved by:

PE No. 72158

Date 01/10/18

Dwg No. 606